CARYSIL

GERMAN ENGINEERED

The Heart of every home is its kitchen and
the heart of every kitchen is CARYSIL

CARYSIL
GERMAN ENGINEERED

Metallica Appliances L.L.C.
Al Asmawi Building, Sheikh Zayed, Dubai - U.A.E.
Tel: +971 (4) 258 1655
Tel: +971 (2) 667 3373
www.metallica

Refined Beauty, Black Collection



















Timeless Beauty, Classic Collection

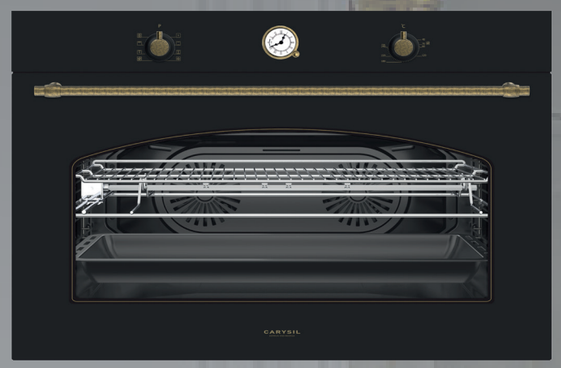

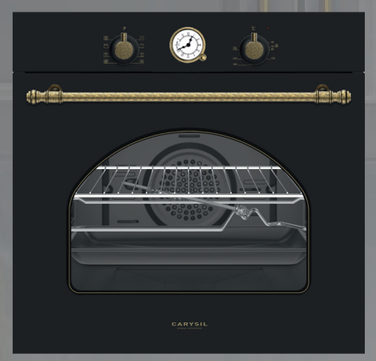





OVENS



LINEAR Gas Oven 90cm

Code : LI OV GS 90 9F BG



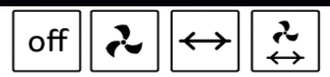

Features

- Gas Oven
- 4 Function
- Touch Screen LED Timer
- Bottom Inox Stripe
- Turnspit
- Easily detachable side racks 4 levels
- 1 Deep Tray
- 1 Tray Rack
- WxDxH : 896x565x595mm

Options

- Pop-up Knobs
- Catalytic Panel
- Black and White Painted Panel
- 10 Function
- Telescopic Rail
- A Energy Efficiency Class

Rustic Classic Oven 90cm

Code : RO OV EL 90 9F GF

Air FryerFeature

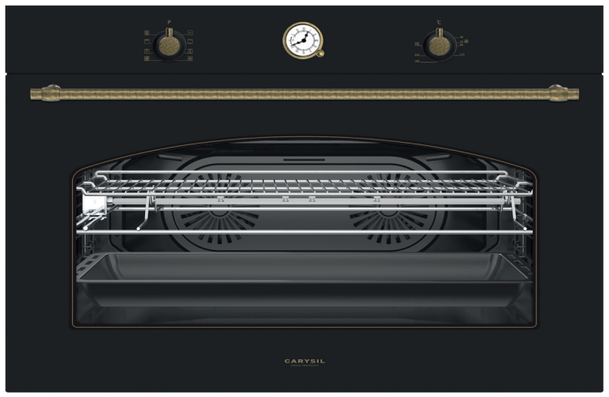



Features

- ELECTRIC Oven
- ELECTRIC Grill + Fan
- 90 cm Black Rustic Panel
- Analogue Reminder
- Knob Automatic Ignition
- Triple Glazed, Full Glass without frame, Easy Remove
- Brussed Rustic Handle + Knobs
- Side Wire Rack
- 1 Deep Tray
- 1 Tray Rack
- WxDxH : 896x565x595mm

Options

- Electrical Grill
- Catalytic Side Wall
- Catalytic (Self Cleaning)
- A Energy Efficiency Class
- 8 Function

LINEAR Electric Oven 90cm

Code : LI OV EL 90 9F BG

Air FryerFeature





Features

- Electric Oven
- 8 Function
- Touch Screen LED Timer
- Turnspit
- Easily detachable side racks 4 levels
- 1 Deep Tray
- 1 Tray Rack
- WxDxH : 896x565x595mm

Options

- Pop-up Knobs
- Catalytic Panel
- A Energy Efficiency Class
- Triple Glazed, Full Glass without frame, Easy Remove

Rustic Classic Oven 60cm

Code : RO OV EL 60 9F GF

Air FryerFeature

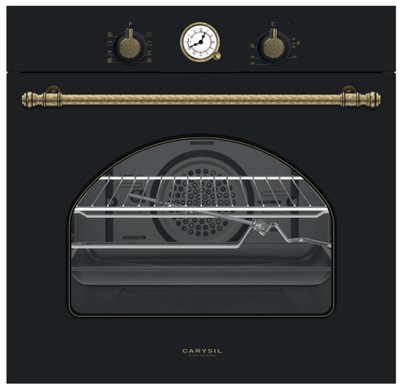



Features

- ELECTRIC Oven
- ELECTRIC Grill + Fan
- 60 cm Black Rustic Panel
- Analogue Reminder
- Knob Automatic Ignition
- Triple Glazed, Full Glass without frame, Easy Remove
- Brussed Rustic Handle + Knobs
- Side Wire Rack
- 1 Deep Tray
- 1 Tray Rack
- WxDxH : 595x565x595mm

Options

- Electrical Grill
- Catalytic Side Wall
- Catalytic (Self Cleaning)
- A Energy Efficiency Class
- 8 Function

LINEAR Electric Oven 60cm

Code : LI OV EL 60 9F BG

Air FryerFeature





Features

- Electric Oven
- 8 Function
- Digital Touch LED Timer
- 1 Std Tray
- 1 Tray Rack
- WxHxD : 595x595x545mm

Options

- E80 lt Cavity Option
- Catalytic back / side wall
- Pop-up knobs (pop-up knob no static alternative)
- 8,10,9 function
- 1/2 Level Telescopic Rails
- Easily detachable side racks
- Gray enamel
- A Energy Efficiency Class
- Triple Glazed, Full Glass without frame, Easy Remove

FREESTANDING COOKER



LINEAR SEMI PROFISSIONAL COOKER

Code : PL CK GS 90 5Z BS

Standard Features

- 4 Gas Burners + 1 Wok + Gas Oven
- Double Turbo Fan With Circular Heater
- Knob Integrated Electronic Ignition
- Digital Reminder
- Splashback
- Side Wire Rack System
- Sabaf Burner Set
- Cast Iron Pan Supports
- Wok Adaptor
- Telescopic Inox Painted
- 1 Deep Tray, 1 Wire Grid, 1 Trivet Grid
- Colour: Inox

Optional Features

- Removable Triple Glass Oven Door
- Catalytic Side Panels
- Flotal Oven Door Glass

MICROWAVE



LINEAR MICROWAVE

Code :LI MW 38 TC BG



Features

Oven Volume (litres)	**34L**
Touch Control	**Yes**
ECO Mode	**Yes**
Grill + Microwave	**Yes**
Defrost Menu	**Yes**
Healthy Menu	**Yes**
Dropdown Handle	**Yes**
Black steel Design	**Yes**
Turntable Size:	**φ345mm**
Microwave Output Power	**900W**
Grill Power: 1100W	**1100W**
Product (W x H x D, mm):	**596x382x456**

LINEAR COMBI OVEN MICROWAVE

Code : LI OM 45 KNBG



Features

Oven Volume (litres)	**44L**
Thermo-insulative Door (GLASSES Nº)	**3**
Door Hinges	**Bottom-2Piece**
Microwave Distribution	**Turntable**
Turntable Diameter (mm)	**360mm**
Under Counter Installation	**Yes**
Auto Menu	**13**
Defrost by Weight	**Yes**
Electronic Clock	**Yes**
Combine Cooking Type	**4**
Cooking Type	**9**
Cooking End Signal	**Yes**
Overheat Protection	**Yes**
Short-circuit Protection	**Yes**
Child Lock	**Yes**
Appliance (WxDxX, in mm, w/o Front projection,w/o handle)	**595x568x454mm**
CCC:220V,50Hz	**Yes**
Microwave + Fan Grill (W)	**E/F:3350; C/B:3200**

Rustic Classic Microwave

Code:RO MW 38 TC GF



Features

Oven Volume (litres)	**25L**
Control type	**Touch Control**
Display	**LED**
Grill Power	**1000W**
Microwave Power	**900W**
Appliance (HxWxD,not incl Front projection, w/o handle)	**388x595x400mm**
Power supply	**230V/50Hz**

LINEAR Warming Drawer14cm

Code : BI WD 60 BG



Features

Cavity Material	**Stainless steel**
Appearance Material	**Stainless steel**
Interior volume (litres)	**22L**
Operating indicator light	**Background light**
Interior light	**N.A**
Heating stopping when open	**By Magnetic proximity switch**
Extension	**Full-extension(350mm)**
Temperature control	**Thermistor**
ype of control setting and signalling devices	**Touch Screen**
Drawer heating plate	**Stainless Steel 40-80°C**
Adjustable temperature range Usable Cavity	**(20L)**
Dimensions(HxWxD) (mm)	**88.5x526.5x420mm**
SAA: 230V-240V,50Hz	**N.A**

HOBS



LINEAR GAS ON GLASS HOB 90CM

Code : LI HO GG 90 5Z BK



Features

- 90 cm Built In Glass Gas Hob (bottom cutting size is 83 cm) with Black Aliminum Frame
- Tempered Glass / Glass thickness 8 mm
- Sabaf burners & valves
- Wok burner: 1x 4,0 kW
- Rapid burner: 1x3,00 kW
- Semi rapid burner: 2x1,75 kW
- Auxiliary burner: 1x1kW
- Cast iron pan supports (P21) & Matte enameled burner caps (Burner cap thickness 4mm)
- LPG Gas adjusted (+ NG converting kit)
- FFD (Flame Failure Device)
- Front control with Matte Black knobs I07
- Under knob automatic ignition,
- English type cable,Voltage 220 - 240 V

CUTOUT

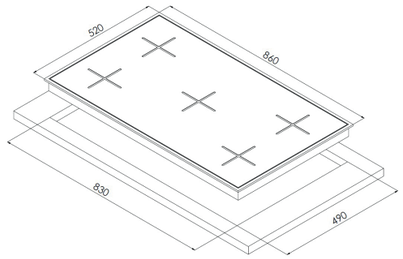

CAST IRON GRIDS
ELECTRONIC IGNITION
SAFETY GAS SHUT-OFF

Notes

- Silk Screen version SER 4 & all printable items should be coordinated
- Logo place: Right side down
- Instruction Manual language: English/Arabic
- Origin: Made In Turkiye
- Stryfoam + Carton box packing

LINEAR GAS ON GLASS HOB 60CM

Code : LI HO GG 60 4Z BK



Features

- with Black Aliminum Frame (cm 56 bottom cutting size is) cm Built In Glass Gas Hob 60
- mm 8 Tempered Glass / Glass thickness
- Sabaf burners & valves
- kW 1x3,00 :Rapid burner
- kW 2x1,75 :Semi rapid burner
- 1x1kW :Auxiliary burner
- (4mm Burner cap thickness) Matte enameled burner caps & (P21) Cast iron pan supports
- LPG Gas adjusted (+ NG converting kit)
- FFD (Flame Failure Device)
- Front control with Matte Black knobs I07
- ,Under knob automatic ignition
- V 240 - 220 English type cable,Voltage

CUTOUT

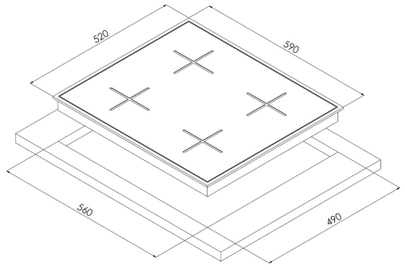

CAST IRON GRIDS
ELECTRONIC IGNITION
SAFETY GAS SHUT-OFF

Notes

- all printable items should be coordinated & Silk Screen version SER4
- Logo place: Right side down
- Instruction Manual language: English/Arabic
- Origin: Made In Turkiye
- Stryfoam + Carton box packing

HOBS

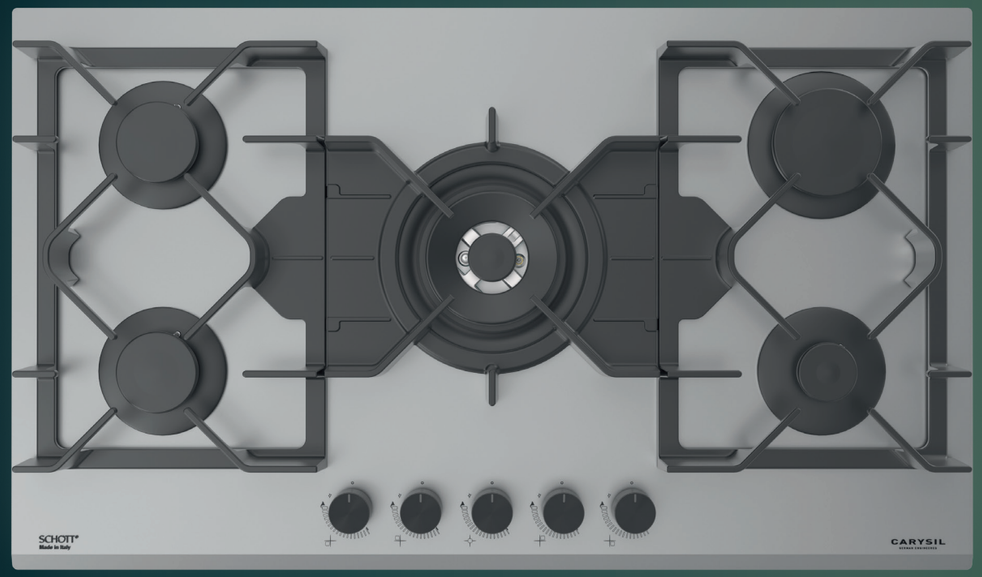

CAST IRON GRIDS · ELECTRONIC IGNITION · SAFETY GAS SHUT-OFF

LINEAR Stainless steel Gas Hob 90CM

Code : LI HO GS 90 5Z SS



Features

- 92cm Built In Stainless steel Gas Hob bottom cutting size is86cm
- 304 mm / Grade AISI 0,7 Stainless steel thickness
- Sabaf burners & valves
- kW 1x3,8 :Wok burner
- kW 1x3,00 :Rapid burner
- kW 2x1,75 :Semi rapid burner
- 1x1kW :Auxiliary burner
- (4mm Burner caps thickness) Matte enameled burner caps & (P40) Cast iron pan suppo
- LPG Gas adjusted (+ NG converting kit)
- FFD (Flame Failure Device)
- Front control with Matte Black knobs I07
- ,Under knob automatic ignition
- V 240 - 220 English type cable,Voltage

CUTOUT

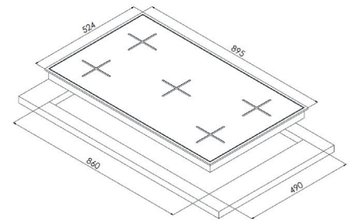

Notes

- all printable items should be coordinated & 4 Silk Screen version SER
- Logo place: Right side down
- Instruction Manual language: English/Arabic
- Origin: Made In Turkiye
- Stryfoam + Carton box packing

CAST IRON GRIDS · ELECTRONIC IGNITION · SAFETY GAS SHUT-OFF

Titanium Glass Gas Hob 90CM

Code : TI HO GS 90 5Z TG

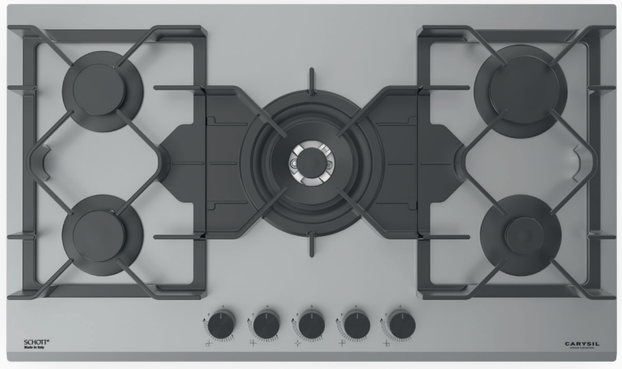

Features

- 90 cm Built In Titanium Glass Gas Hob (bottom cutting size is 86 cm)c
- Tempered Glass / Glass thickness 8 mm
- Sabaf burners & valves
- Wok burner: 1x 3,8 kW
- Rapid burner: 1x3,00 kW
- Semi rapid burner: 2x1,75 kW
- Auxiliary burner: 1x1kW
- Cast iron pan supports (P35) & Matte enameled burner caps (Burner cap thickness 4mm
- LPG Gas adjusted (+ NG converting kit)
- FFD (Flame Failure Device)
- Front control with Matte Black knobs I07
- Under knob automatic ignition,
- English type cable,Voltage 220 - 240 V

CUTOUT

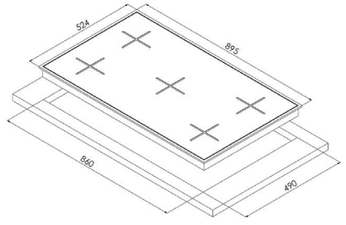

Notes

- Silk Screen version SER 4 & all printable items should be coordinated
- Logo place: Right side down
- Instruction Manual language: English/Arabic
- Origin: Made In Turkiye
- Stryfoam + Carton box packing

CLASSIC HOOBS



Rustic Classic Gas Hob 90cm

Code:RO HO GS 90 5Z GF



CUTOUT

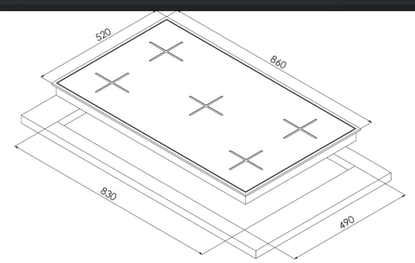

Standard Features

- 90 cm Rustic built-in hob
- 5 gas burner
- Cast iron pan supports
- Underknob auto ignition
- NG/LPG options
- 1XWOK burner: 3800W
- 1XRapid burner: 3000W
- 2XSemi Rapid burner: 1750W
- 1XAuxilary burner: 1000W

Optional Features

- Flame Failure Device (FFD)
- Italian Sabaf burners
- Ivory, beige enameled top plate

RusticClassic Gas Hob60cm

Code:RO HO GS 60 5Z GF



CUTOUT

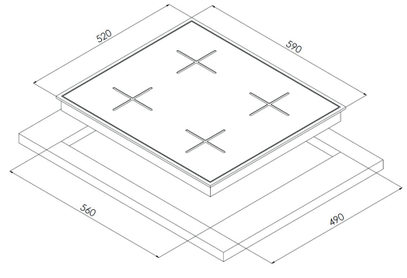

Standard Features

- 60 cm
- Anthracite Rustic Hob
- 3 Gas + 1 Wok Burner
- Cast Iron Pan Support
- Under Knob Auto Ignition
- Front Control
- NG/LPG Options
- 1 x Wok Burner: 3500 W
- 2 x Semi Rapid Burner: 1750 W
- 1 x Auxiliary Burner: 1000 W

Optional Features

- Italian Sabaf Burners
- Flame Failure Device
- Cast Iron Wok Stand

ELECTRIC HOBS



VITROCERAMIC ELECTRIC HOB 30cm

Code : VC HO EL 30 2Z BG

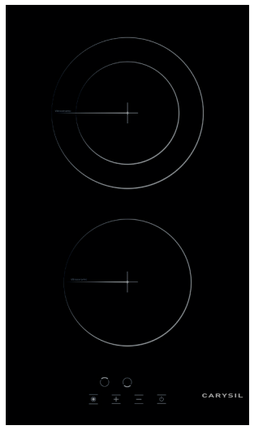

Features

- 30 cm - Vitroceramic Glass
- 2 highlight Zones
- Touch Control
- 9 Power Levels
- Child Lock
- Safety Lock
- Residual Heat Indicators
- Front Control
- Automatic Safety Cut-Out
- 1 x 1200 W
- 1 x 700-1700 Double Circut Cook Zone W

VITROCERAMIC ELECTRIC HOB 90cm

Code : VC HO EL 90 5Z BG



Features

- 90 cm - Vitroceramic Glass
- 5 highlight Zones
- Touch Control
- 9 Power Levels
- Child Lock
- Safety Lock
- Residual Heat Indicators
- Front Control
- Automatic Safety Cut-Out
- Front Right 1200 W
- Front Lift 700-1700 W
- Rear Right 1800 W
- Rear Lift 1200 W
- Middle Double Oven Cook 1000-1800 W

VITROCERAMIC ELECTRIC HOB 60cm

Code : VC HO EL 60 4Z BG

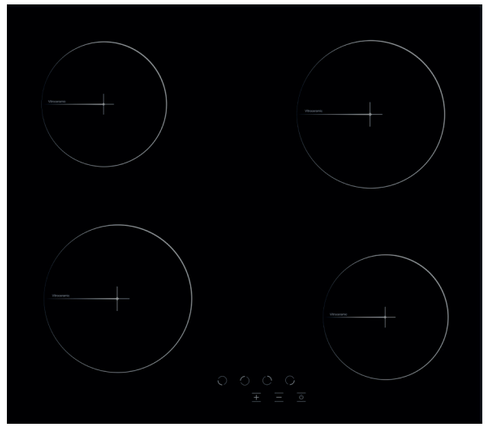

Features

- 60 cm - Vitroceramic Glass
- 4 highlight Zones
- Touch Control
- 9 Power Levels
- Child Lock
- Safety Lock
- Residual Heat Indicators
- Front Control
- Automatic Safety Cut-Out
- 2 x 1200 W
- 1 x 1800 W
- 1 x 1700 W / 700W Dual

COOLING LINE



BULT-IN FULL FRIDGE

BI FR NF 60 DC

FULL NO FROST

- Total Net Volume 285L
- Control Display Type LED
- Auto Defrost YES
- Safety Glass Shelves 4+1
- Fan Ventilation YES
- Supply Voltage, V/Hz 60Hz~230/50
- Rated Current, A 0.8
- Noise Level, dBA 41db
- Product Dimension HxWxD mm 1769x540x550mm
- Product Weight(kg) 57kg
- Cooling System Frost Free Cooling
- Super cooling function YES



BULT-IN COMBI REFRIGERATOR

BI CF NF 60 DC

FULL NO FROST

Built-In COMBI REFRIGERATOR
550mm combi. 30 / 70 split, total no frost, digital controller wine rack*540*1769 sliding hinge

- Total Net Volume 241L
- Fridge Net Volume 177L
- Freezer Net Volume 64L
- Control Display Type LED
- Auto Defrost YES
- Safety Glass Shelves 4
- Fan Ventilation YES
- Supply Voltage, V/Hz 60Hz~230/50
- Rated Current, A 0.8
- Noise Level, dBA 41db
- Product Dimension HxWxD mm 1769x540x550mm
- Product Weight(kg) 63kg
- Cooling System Frost Free Cooling



BULT-IN FULL FREEZER

BI FZ NF 60 DC

FULL NO FROST

- Total Net Volume 200L
- Control Display Type LED
- Auto Defrost YES
- Safety Glass Shelves 4
- Fan Ventilation YES
- Supply Voltage, V/Hz 60Hz~230/50
- Rated Current, A 0.8
- Noise Level, dBA 41db
- Product Dimension HxWxD mm 1769x540x550mm
- Product Weight(kg) 65kg
- Cooling System Frost Free Cooling



REFRIGERATOR 75 COMBI

BI CF NF 75 DC

FULL NO FROST

- Total Net Volume 341L
- Fridge Net Volume 257L
- Freezer Net Volume 84L
- Control Display Type LED
- Auto Defrost YES
- Safety Glass Shelves 4
- Crispers 2
- Fan Ventilation YES
- Supply Voltage, V/Hz 60Hz~230/50
- Rated Current, A 0.8
- Noise Level, dBA 41db
- Product Dimension HxWxD mm 1930x690x550mm
- Product Weight(kg) 83kg
- Cooling System Frost Free Cooling



Built Under Fridge

BI UR DF 60 AC



- Total Net Volume 135L
- Control Display Type LED
- frostless YES
- Safety Glass Shelves 4+1
- Fan Ventilation YES
- Supply Voltage, V/Hz 60Hz~230/50
- Rated Current, A 0.8
- Noise Level, dBA 40db
- Product Dimension HxWxD mm 820x596x550mm
- Product Weight(kg) 57kg
- Cooling System Frost Free Cooling
- Super cooling function YES

Built Under Freezer

BI UZ DF 60 AC



- Total Net Volume 95L
- Control Display Type LED
- frostless YES
- Safety Glass Shelves 4+1
- Fan Ventilation YES
- Supply Voltage, V/Hz 60Hz~230/50
- Rated Current, A 0.8
- Noise Level, dBA 40db
- Product Dimension HxWxD mm 820x596x550mm
- Product Weight(kg) 57kg
- Cooling System Frost Free Cooling
- Super cooling function YES

REFRIGERATOR 90 COMBI

Reversable Door · NO FROST · A++

BI CF NF 90 DC

FULL NO FROST

- Total Net Volume 558L
- Fridge Net Volume 402L
- Freezer Net Volume 156L
- Control Display Type LED
- Auto Defrost YES
- Safety Glass Shelves 4
- Crispers 2
- Fan Ventilation YES
- Supply Voltage, V/Hz 60Hz~230/50
- Rated Current, A 0.8
- Noise Level, dBA 40db
- Product Dimension HxWxD mm 2120x910x590mm
- Cooling System Frost Free Cooling



Premier Electronic Control

Total No-frost

Water dispenser

Ice marker

WINE COOLER



Wine cooler60cm

Code:AVU53TDZB1



- 53 bottles
- 37 dB
- Dual zone service wine cellar
- 4 sliding wooden shelves
- 1 fixed display shelf
- Reversible door fully glazed with
- triple anti-UV glass
- Adjustable temperature 5 - 12 °C /
- 12 - 20 °C
- 4 adjustable feet of 7.0 cm
- W 59.5 x D 57.4 x H 81.7/88.7 cm



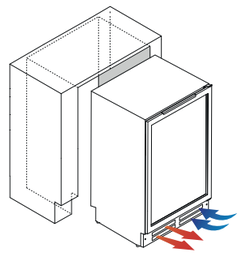

Wine cooler30cm

Code:AVU27TDZB1



- 22 bottles
- 37 dB
- Single zone service wine cellar
- Possible vertical storage
- 4 steel wire shelves with wooden
- front
- Reversible door fully glazed with
- triple anti-UV glass
- Adjustable temperature 5 - 20 °C
- 4 adjustable feet of 7.0 cm
- W 29.5 x D 57.4 x H 81.7/88.7 cm



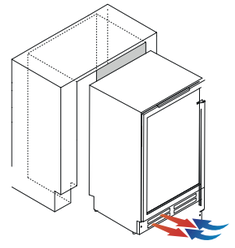

DISH WASHER



Built in Under Counter Dish Washer

BI DW 60 6P 13 49

Control Display Type	LED
Place	+13
Energy Class	+A
Programs	6
Supply Voltage, V/Hz	220-240v/50hz
Noise Level, dBA	55db
Product Dimension HxWxD mm	870x598x570
Basket	3



FOOD WASTE DISPOSER



HEAVY DUTY 3/4 HP FOOD WASTE DISPOSER
Hopper Capacity :1070 ml



- Permanent Magnet DC Motor and Low Noise
- High-speed dynamic balanced armature
- R.P.M. Motor 2500
- Multi-functional stopper
- Corrosion proof grinding components
- Stainless Steel wear-resistant
- High strength plastic structure

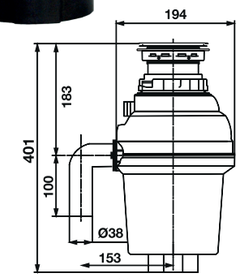

Current (A) 3.45
Power (w) 560

HEAVY DUTY 1/4 HP FOOD WASTE DISPOSER
Hopper Capacity :1070 ml



- Permanent Magnet DC Motor and Low Noise
- High-speed dynamic balanced armature
- R.P.M. Motor 2500
- Multi-functional stopper
- Corrosion proof grinding components
- Stainless Steel wear-resistant
- High strength plastic structure

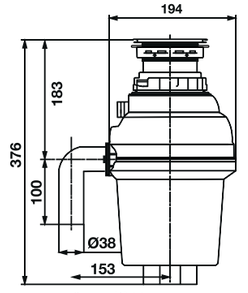

Current (A) 2.3
Power (w) 370



HOODS



5501X-90
Inox

MAIN FEATURES

60-90 CM · LED LIGHT · BOOSTER LEVELS

- 90 cm Free Standing Cooker Hood
- 1 motor-280m³/h
- Push Button Control
- 3 Speed
- 1x5 Watt LED Lamp
- Lamp Cover

COLOR OPTIONS

Black · Grey · Inox · Beige · Brown · White

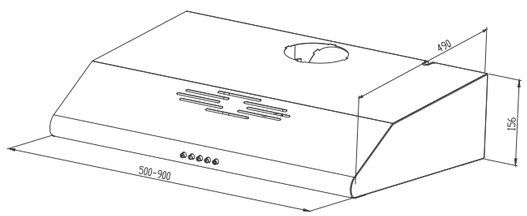



5501X-60
Inox

MAIN FEATURES

60-90 CM · LED LIGHT · BOOSTER LEVELS

- 60 cm Free Standing Cooker Hood
- 1 motor-280m³/h
- Push Button Control
- 3 Speed
- 1x5 Watt LED Lamp
- Lamp Cover

Black · Grey · Inox · Beige · Brown · White

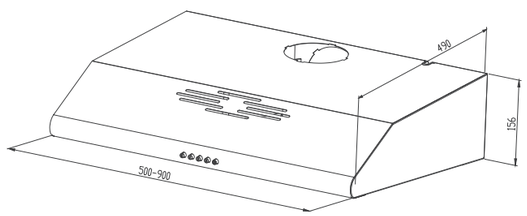



SD54 - 90
Inox

60-90 CM · LED LIGHT · BOOSTER LEVELS

> MAIN FEATURES

- 90 cm Wall-type Chimney Hood
- Push Button Control
- 3 Speed
- 1x5 Watt LED Lamp
- Aluminum Filter
- 120 mm Air Outlet
- Double Chimney
- Noise Level: min 47dB-max 61dB
- Free Flow Extraction Power: 620 m³/h-140 Watt
- Package Dimensions (WxDxH): 62x30x54

> COLOR OPTIONS

Black · Gray · Brown · White

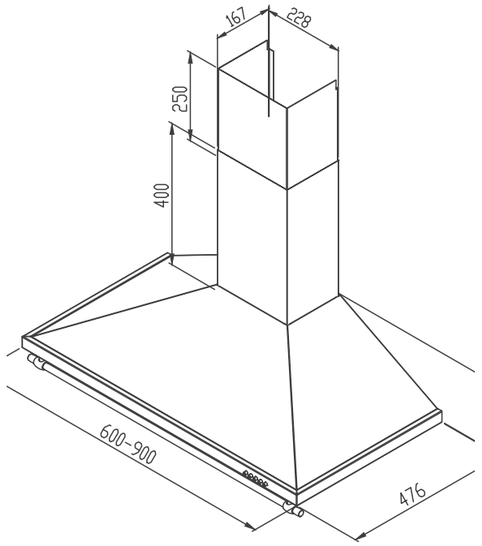



LD35-90
Inox

60-90 CM · LED LIGHT · BOOSTER LEVELS

> MAIN FEATURES

- 90 cm Wall-type Chimney Hood
- Push Button Control
- 3 Speed
- 1x5 Watt LED Lamps
- Aluminum Filter
- 150 mm Air Outlet
- Double Chimney
- Noise Level: min 47dB-max 61dB
- Free Flow Extraction Power: 850 m³/h-Motor 200 Watt
- Package Dimensions (WxDxH): 65x32x55

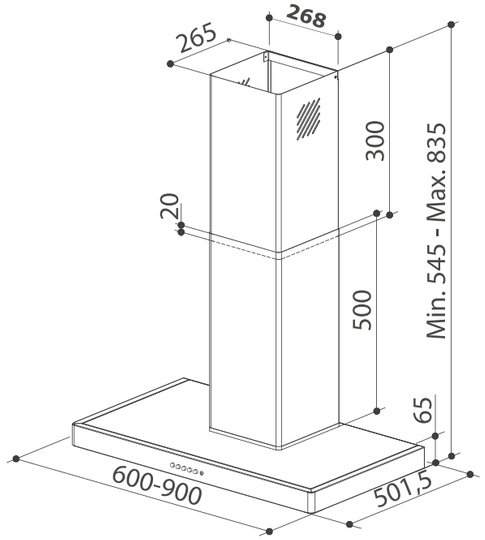









Move Black 60cm

60-90 CM · LED LIGHT · BOOSTER LEVELS

> MAIN FEATURES

- 60 cm Wall-type Chimney Hood
- Touch Control
- 3 Speed
- 2x1 Watt Mini LED Spots
- Stainless Stelel Profesinol Buffel Filter Type
- 150 mm Air Outlet
- Double Chimney
- Noise Level: min 57dB-max 67dB
- Free Flow Extraction Power: 1000 m³/h- Motor200 Watt

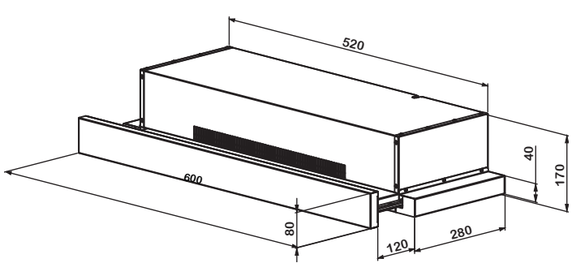

Move Black 90cm

60-90 CM · LED LIGHT · BOOSTER LEVELS

> MAIN FEATURES

- 90 cm Wall-type Chimney Hood
- Touch Control
- 3 Speed
- 2x1 Watt Mini LED Spots
- Stainless Stelel Profesinol Buffel Filter Type
- 150 mm Air Outlet
- Double Chimney
- Noise Level: min 57dB-max 67dB
- Free Flow Extraction Power: 1000 m³/h- Motor200 Watt

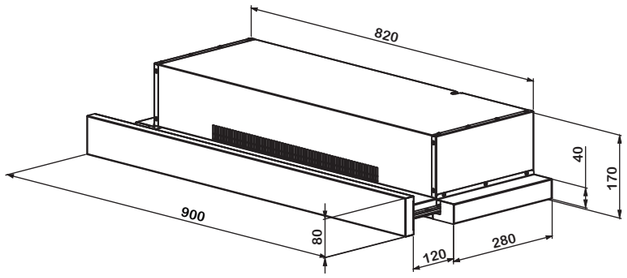

Move Steel 60cm

60-90 CM · LED LIGHT · BOOSTER LEVELS

> MAIN FEATURES

- 60 cm Wall-type Chimney Hood
- Touch Control
- 3 Speed
- 2x1 Watt Mini LED Spots
- Stainless Stelel Profesinol Buffel
- Filter Type
- 150 mm Air Outlet
- Double Chimney
- Noise Level: min 57dB-max 67dB
- Free Flow Extraction Power: 1000 m³/h- Motor200 Watt

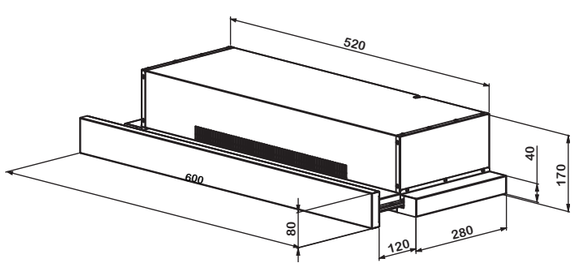

Move Steel 90cm

60-90 CM · LED LIGHT · BOOSTER LEVELS

> MAIN FEATURES

- 90 cm Wall-type Chimney Hood
- Touch Control
- 3 Speed
- 2x1 Watt Mini LED Spots
- Stainless Stelel Profesinol Buffel
- Filter Type
- 150 mm Air Outlet
- Double Chimney
- Noise Level: min 57dB-max 67dB
- Free Flow Extraction Power: 1000 m³/h- Motor200 Watt

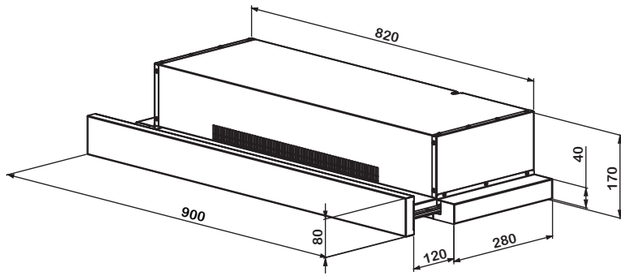



LDI36GL-90-PRO

Island/Inox+Black

Baffle Filter

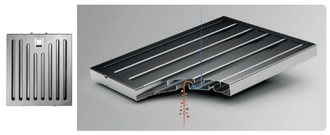

90-60 CM | LED LIGHT | TIMER SHUT-DOWN | FILTER SATURATION INDICATOR | BOOSTER LEVELS

> MAIN FEATURES

- 90 cm Island-type Inclined Hood
- Double Side Electronic Control
- 3 Speed
- 2x2 Watt LED Spots
- Aluminum Filter
- 150 mm Air Outlet
- Double Chimney
- Filter Saturation Indicator
- Auto Shut Down Timer
- Noise Level: min 57dB-max67dB
- Free Flow Extraction Power: 1000 m³/h Motor 200 Watt
- Package Dimensions (WxDxH): 98x71x62

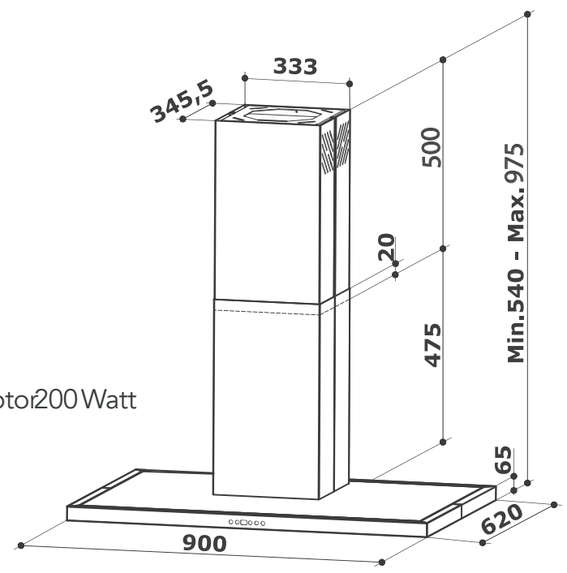



MINT-90-B-PRO

> MAIN FEATURES

Baffle Filter

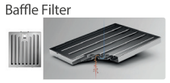

- TYPE OF APPLIANCE : Wall mounted chimney
- FINISH : Black body + Black tempered glass
  AIR FLOW: 1450m³/h
- SPEED : 3
- LAMP TYPE : LED 2-x 2 W
- FILTER TYPE : Baffle / optional Charcoal AIR
- OUTLET 150 mm outlet with
- 2m pipe
- CONTROL : Motion Touch Control OPERATING MODE: External /circulation
- COMFORT : Oil Collector Heat clean

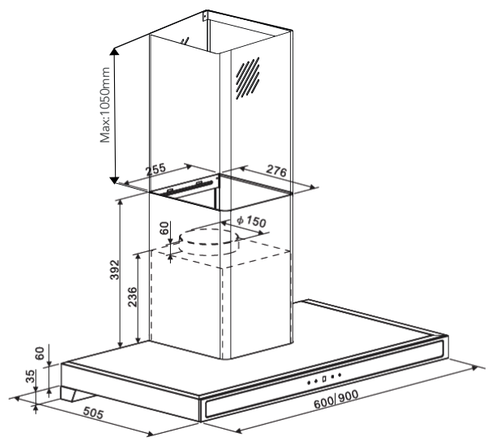

MINT-90-X-PRO

> MAIN FEATURES

Baffle Filter

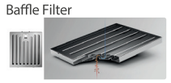

- TYPE OF APPLIANCE : Wall mounted chimney
- FINISH : Black body + Black tempered glass
  AIR FLOW: 1450m³ /h
- SPEED : 3
- LAMP TYPE : LED 2- x 2 W
- FILTER TYPE : Baffle / optional Charcoal AIR
- OUTLET 150 mm outlet with
- 2m pipe
- CONTROL : Motion Touch Control OPERATING MODE: External /circulation
- COMFORT : Oil Collector Heat clean

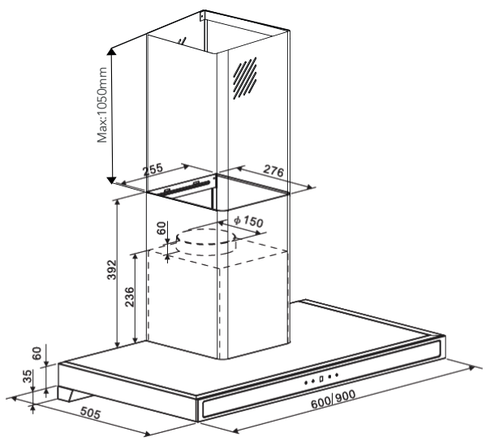

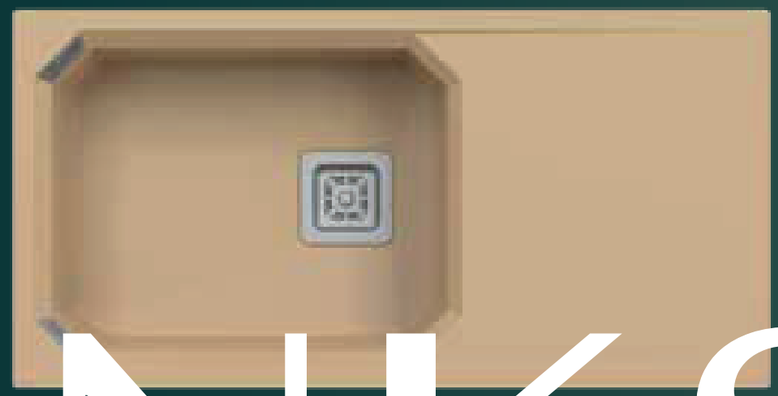

SINKS



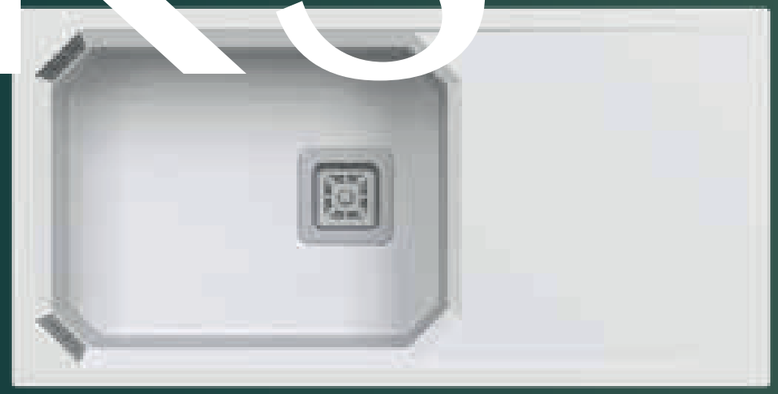



SAND AL 2418

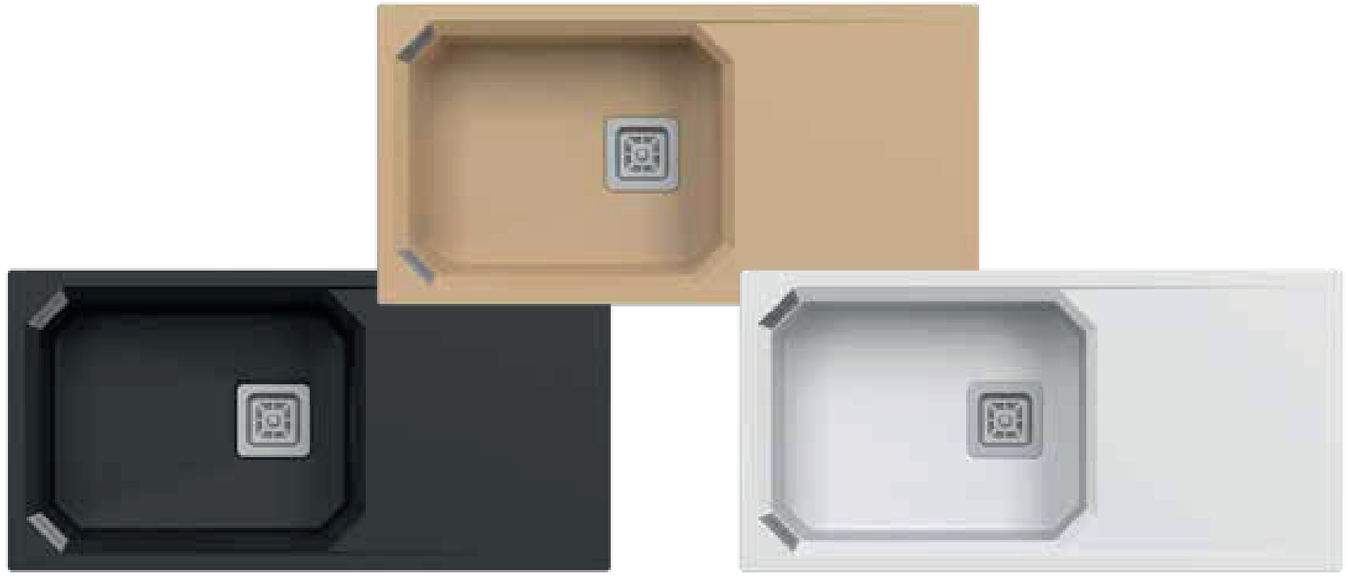

CHARCOAL AL 2418

SNOW AL 2418

Sink: 914 mm x 457 mm
Bowl: 480 mm x 365 mm x 200 mm

INSTALLATION



Top Mount Flush Mount Under Mount



SAND AL 2418



CHARCOAL AL 2418



SNOW AL 2418

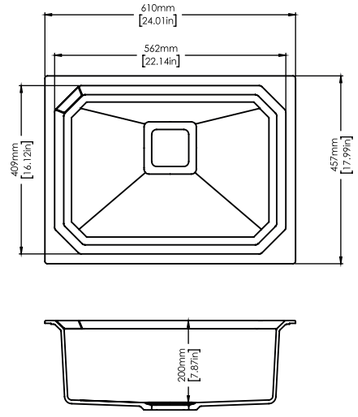

* Size : 24" x 18" x 8"

Installation Options

Line Drawing

RETRO



WALTZ WORKSTATION



RETRO A100

Colours

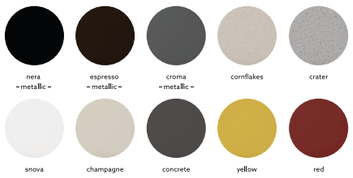



Dimensions

Sink: 865 mm × 540 mm
Bowl: 783 mm × 426 mm × 229 mm

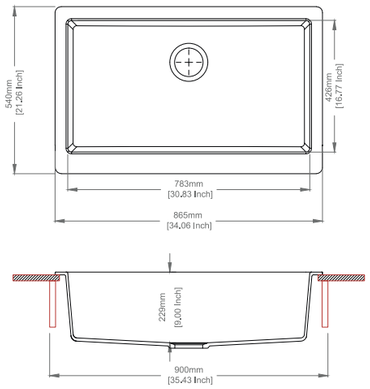

Installation

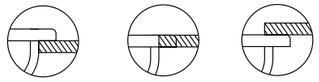

Top Mount | Flush Mount | Under Mount

WALTZ 780
NERA



WALTZ 780
METALLIC



WALTZ 780
SNOVA

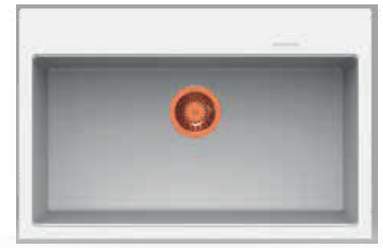

ACCESSORIES FOR WALTZ 780 WORKSTATION SINK IN ROSE GOLD & BLACK



Chopping board



Flexible Basket



Floor Grid



Colander

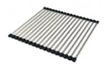

Fold matt



Faucet



Soap dispencer



Plumbing Kit



Black Faucet



Black Soap dispencer



Black Plumbing Kit

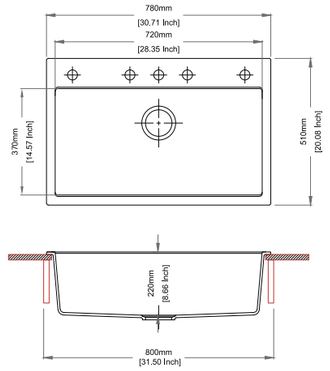

QUARTZ



WALTZ

WALTZ 780

Quartz sink with single bowl



colors

nera -metallic-
espresso -metallic-
croma -metallic-
cornflakes
crater
snova
champagne
concrete
yellow
red

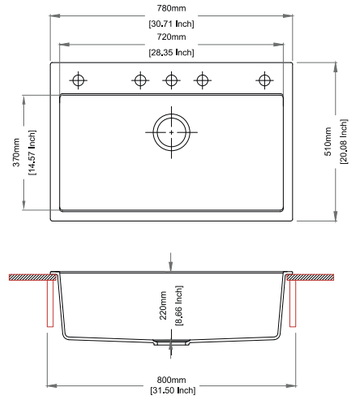

Dimensions

Sink: 780 mm x 510 mm
Bowls: 720 mm x 370 mm x 220 mm

Installation



Top Mount
Flush Mount
Under Mount

WALTZ 560

Quartz sink with single bowl



colors

nera -metallic-
espresso -metallic-
croma -metallic-
cornflakes
crater
snova
champagne
concrete
yellow
red

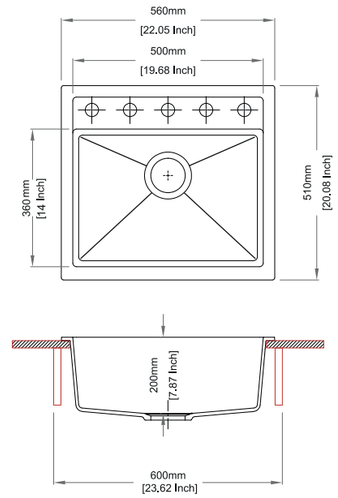

Dimensions

Sink: 560 mm x 510 mm
Bowls: 500 mm x 360 mm x 200 mm

Installation

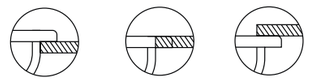

Top Mount
Flush Mount
Under Mount

QUARTZ

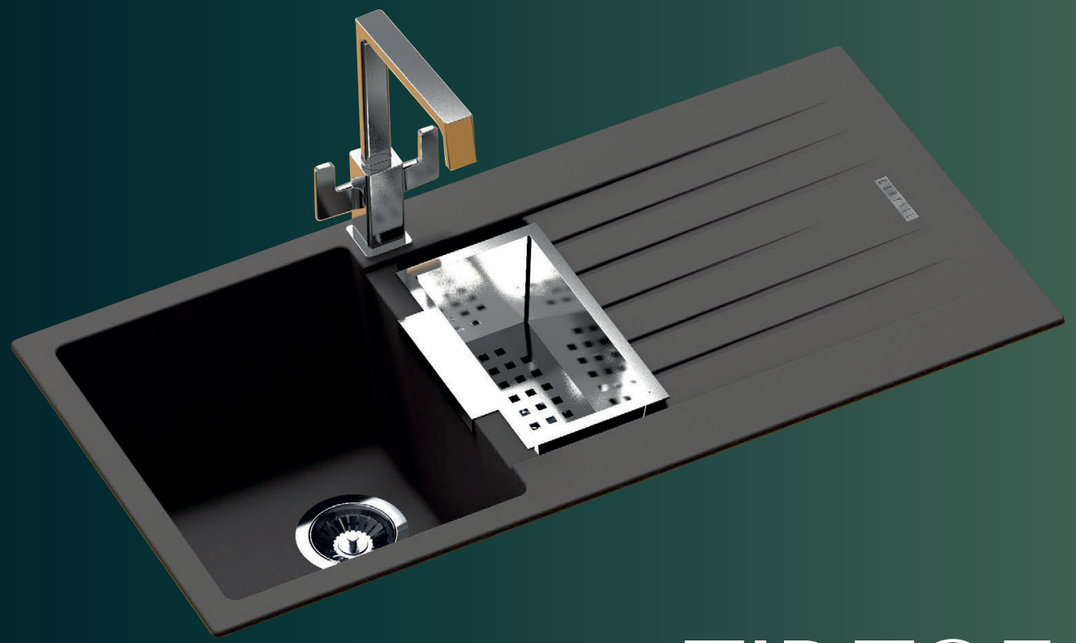

TIP TOE SERIES

TIP TOE D200

Quartz sink with double bowls + drainer



colors

nera -metallic- · espresso -metallic- · croma -metallic- · cornflakes · crater

snova · champagne · concrete · yellow · red

Dimensions

Sink: 1000 mm x 500 mm
Bowls: 480 mm x 430 mm x 200 mm

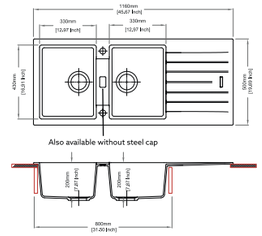

Installation

Top Mount · Flush Mount · Under Mount

TIP TOE D150

Quartz sink with single and half bowl + drainer



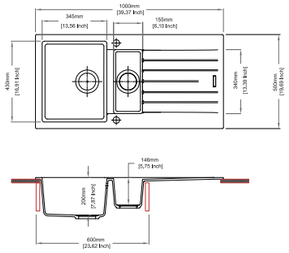

colors

nera -metallic- · espresso -metallic- · croma -metallic- · cornflakes · crater

snova · champagne · concrete · yellow · red

Dimensions

Sink: 1000 mm x 500 mm
Bowls: 345 mm x 430 mm x 200 mm
Half bowl: 155 mm x 340 mm x 146 mm

Installation

Top Mount · Flush Mount · Under Mount

TIP TOE D100

Quartz sink with single bowl+ drainer



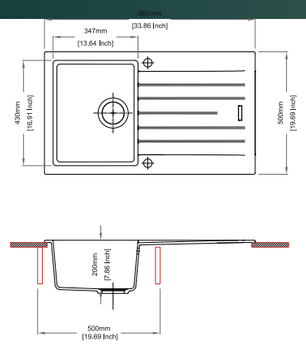

colors

nera -metallic- · espresso -metallic- · croma -metallic- · cornflakes · crater

snova · champagne · concrete · yellow · red

Dimensions

Sink: 860 mm x 500 mm
Bowls: 347 mm x 430 mm x 200 mm

Installation

Top Mount · Flush Mount · Under Mount

TIP TOE D100L

Quartz sink with large single bowl + long drainer



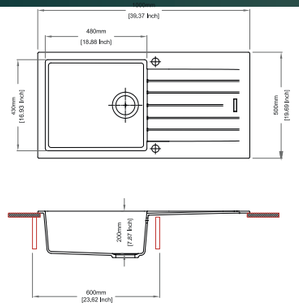

colors

nera -metallic- · espresso -metallic- · croma -metallic- · cornflakes · crater

snova · champagne · concrete · yellow · red

Dimensions

Sink: 1160 mm x 500 mm
Bowls: 330 mm x 430 mm x 200 mm

Installation

Top Mount · Flush Mount · Under Mount

LARGO

Installation



Top Mount | Flush Mount | Under Mount



LARGO 3620

Quartz sink with double bowls



colors

nera -metallic- | espresso -metallic- | croma -metallic- | cornflakes | crater

snova | champagne | concrete | yellow | red

Dimensions

Sink900 mm × 500 mm
Left Bowl: 465 mm × 443 mm × 230 mm
Right Bowl: 325 mm × 443 mm × 230 mm

LARGO 4520

Quartz sink with double bowls



colors

nera -metallic- | espresso -metallic- | croma -metallic- | cornflakes | crater

snova | champagne | concrete | yellow | red

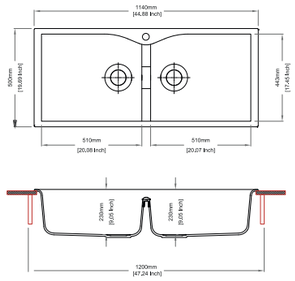

Dimensions

Sink: 1140 mm x 500 mm
Left Bowl: 465 mm x 443 mm x 230 mm
Right Bowl: 510 mm x 443 mm x 230 mm

ROCK



ROCK

colors

nera -metallic- | espresso -metallic- | croma -metallic- | cornflakes | crater

snova | champagne | concrete | yellow | red



Sink: Ø 460mm
Bowl: Ø 394mm, depth: 190 mm

QUARTZ

Installation





ENGIMA

ENIGMA N200 S

Quartz sink with double bowls

colors



Dimensions

Sink: 850 mm x 460 mm
Bowl: 380 mm x 400 mm x 200 m



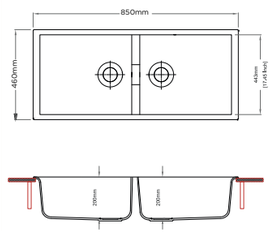

ENIGMA N100 L

Quartz sink with single bowl

colors



Dimensions

Sink: 780 mm x 460 mm
Bowl: 720 mm x 400 mm x 220 mm

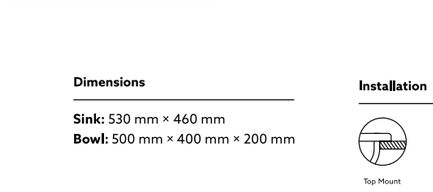

ENIGMA N100 N

nano

Quartz sink with single bowl



colors



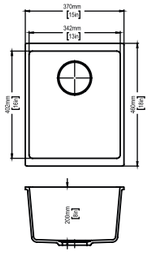

Dimensions

Sink: 370 mm × 460 mm
Bowl: 340 mm × 400 mm × 200 mm

Installation



ENIGMA N100 M

maga

Quartz sink with single bowl



colors



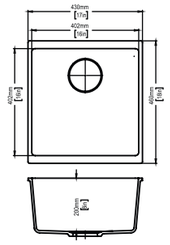

Dimensions

Sink: 430 mm × 460 mm
Bowl: 400 mm × 400 mm × 200 mm

nstallation



ENIGMA N100 S

small

Quartz sink with single bowl



colors



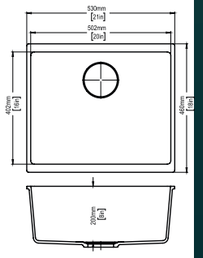

Dimensions

Sink: 530 mm × 460 mm
Bowl: 500 mm × 400 mm × 200 mm

Installation



STAINLESS STEEL

Installation





WZS 610 56

Waltz56



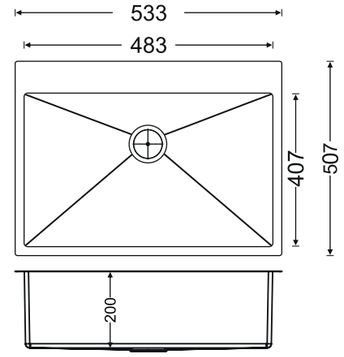

Dimension:
Sink: 533 mm x 507 mm
Bowls: 483 mm x 407 mm x 200 mm

WZS 610 78

Waltz 78



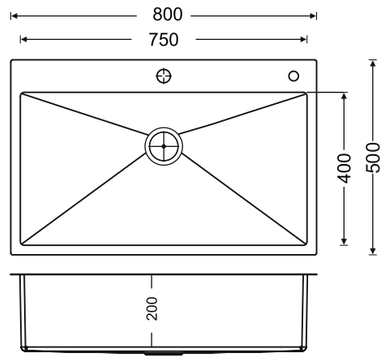

Dimensions:
Sink: 800 mm x 500 mm
Bowls: 750 mm x 400 mm x 200 mm

WALTZ

Waltz Accessoers

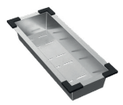

COLANDER

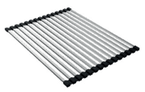

FOLD MATT



FLEXIBLE BASKET



BOTTOM MESH



CHOPPING BOARD



SOAP DISPENSER

STAINLESS STEEL

Installation





MICRO RADIUS

MQS220 86/83



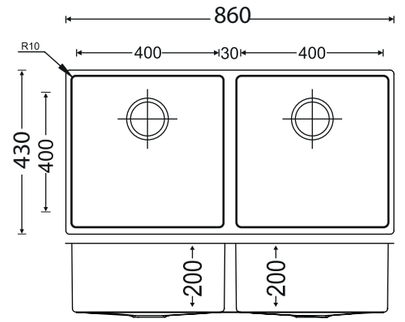

Dimensions:
Sink: 860 mm x 430 mm
Bowls: 400 mm x 400 mm x 200 mm

MQS 210 88/83



Dimensions:
Sink: 880 mm x 450 mm
Bowls: 830 mm x 400 mm x 230 mm

MQS 210 45/40



Installation



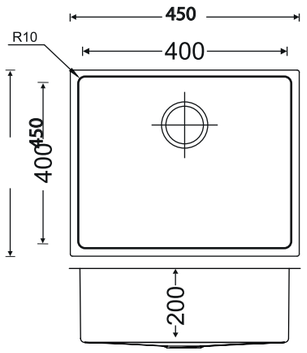

Dimensions:
Sink: 450 mm x 450 mm
Bowls: 400 mm x 400 mm x 200 mm

MQS210 55/50



Installation

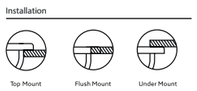

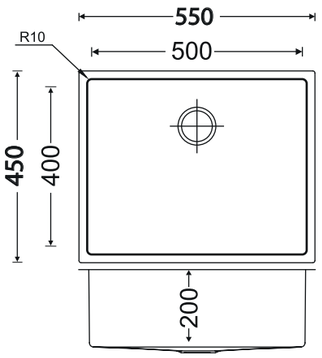

Dimensions:
Sink: 550 mm x 450 mm
Bowls: 500 mm x 400 mm x 200 mm

MQS210 78/75



Installation

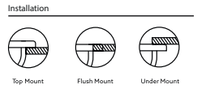

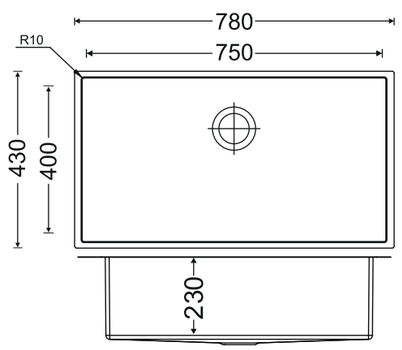

Dimensions:
Sink: 780 mm x 430 mm
Bowls: 750 mm x 400 mm x 230 mm

FARMHOUSE SINK



FHS 711 80 FARME HOUSE SINK



DIMENSIONS (mm)

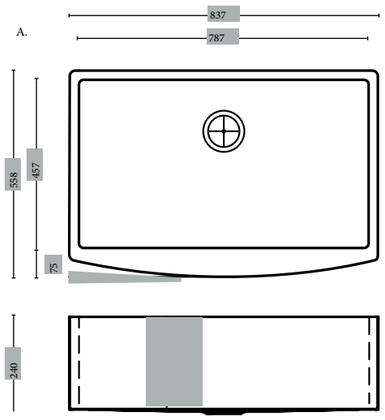

GERMAN DESIGN



GDS 611 116 GERMAN DESIGN

- RH & LH

A. D 100 XL LH B. D 100 XL RH



DIMENSIONS (mm)

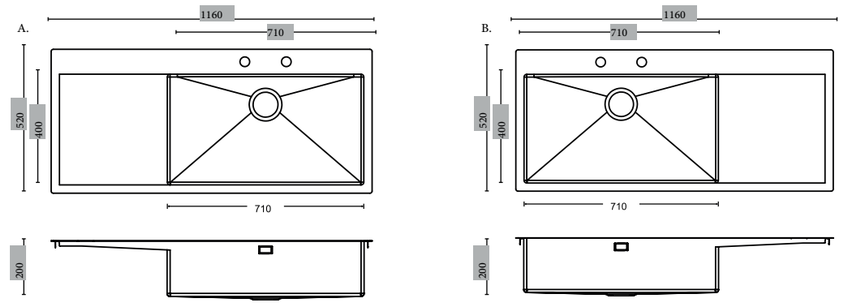

MIXER



Polo



SNOVA



NERA



CHAMPAGNE



STAINLESS STEEL



MATT BLACK

Dimensions

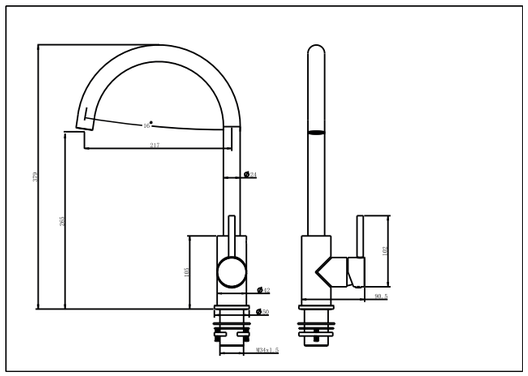

CARYSIL
POLO Single lever kitchen mixer swivel spout,aerator 6 l',flex hoses 55cm 1/2"F,ceramic cartridge 0-90° Carysil

Polo Pro
PULL OUT MIXER



MATT BLACK

Dimensions

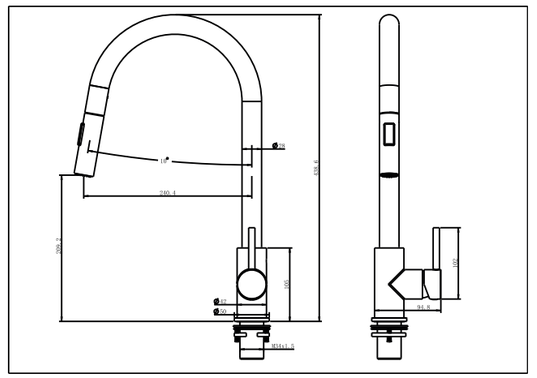

CARYSIL
POLO_PRO Single lever kitchen mixer with pull down hand shower,aerator 6 l',flex hoses 55cm 1/2"F,ceramic cartridge 0-90° Carysil
304

Perla



STAINLESS STEEL



MATT BLACK

Dimensions

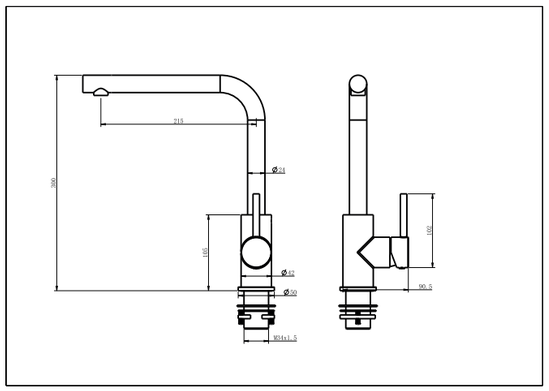

CARYSIL PERLA Single lever kitchen mixer swivel spout aerator 6L,
flex hoses 55cm 1/2"F,ceramic cartridge 0-90°
Carysil 304

Perla Pro

PULL OUT MIXER



MATT BLACK



CHAMPAGNE



STAINLESS STEEL

Dimensions

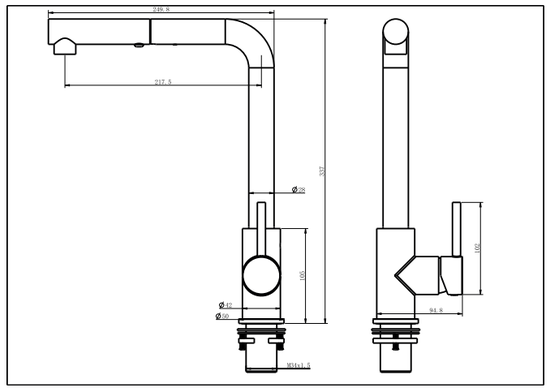

CARYSIL PERLA_PRO Single lever kitchen mixer with pull out hand shower ,aerator 6 l',flex hoses 55cm 1/2"F,ceramic cartridge 0-90° Carysil

Berlin Pro

PULL OUT MIXER



CHAMPAGNE



SNOVA



STAINLESS STEEL

NERA



MATT BLACK

Dimensions

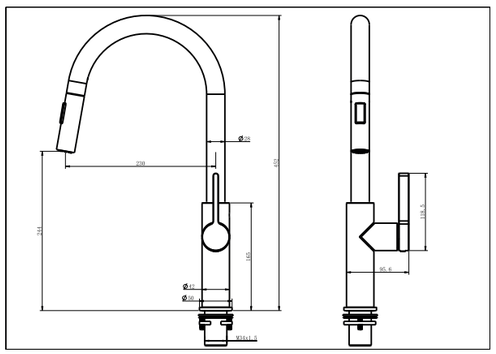

CARYSIL BERLIN_PRO Single lever kitchen mixer with pull down
hand shower ,aerator 6 l',flex hoses 55cm 1/2"F,ceramic cartridge 0-90° Carysil SNOVA

Classic



bronze
850VFO



graphite
850GF

LONDON

One-lever sink mixer with shower

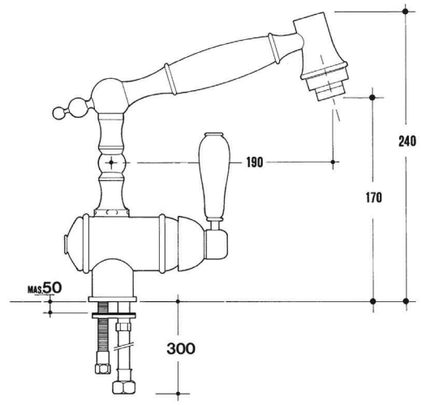

MADE IN ITALY